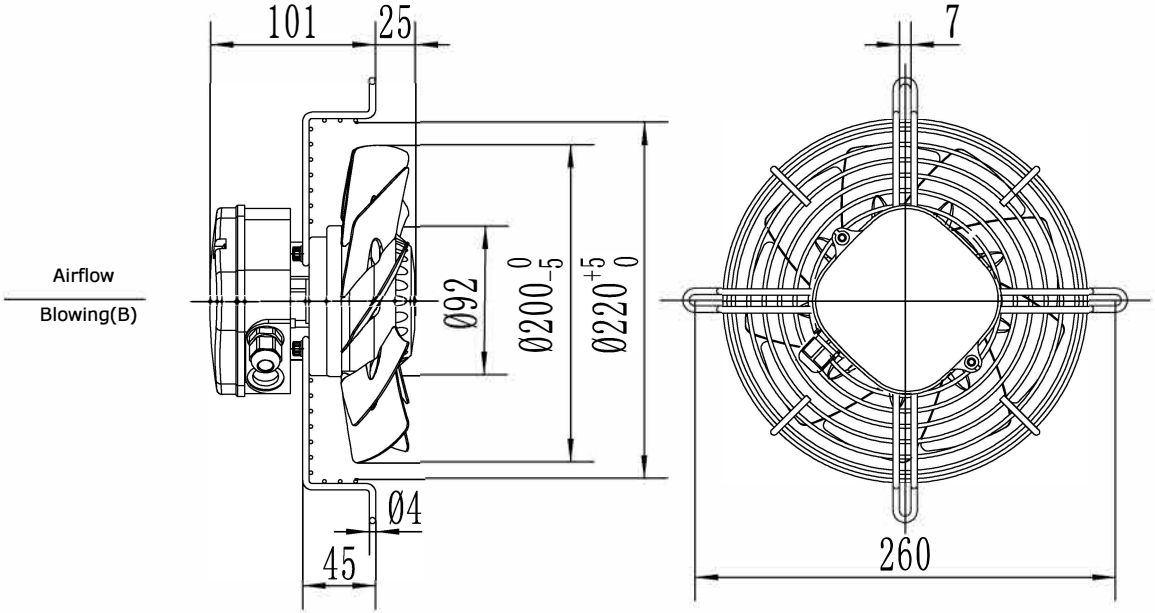

UNIT	Axial fan motor
MOTOR	Single phase motor with capacitor
MOTOR TYPE	RW4-200 230V PUHALTAVA
VOLTAGE (V)	230
FREQUENCY (Hz)	50
INPUT POWER (W)	40
CURRENT (A)	0.21
SPEED (r/min)	1400
AIR FLOW 20Pa (m³/h)	415
NOISE (dBA)	46
CAPACITOR (μF/450V)	1.5
ROTATION	CW ,looking into the end-shield
INSULATION CLASS	B
MOTOR PROTECTION	Thermocontact 135±5℃
TEMPERATURE RISE	75K max
PROTECTION CLASS	IP54
OPERATING TYPE	S1
AMBIENT TEMPERATURE	-30°C +60°C
BEARINGS	Ball bearings
MOUNTING TYPE	Horizontal or Vertical
ELECTRICAL CONNECTION	Lead wire Silikon 4G 0.50mm² ,Length 100mm in terminal box connected
APPROVALS	CE
NET WEIGHT/GROSS WEIGHT	2.0/2.5kg
PACKING	24.5*24.5*16cm

LABEL :

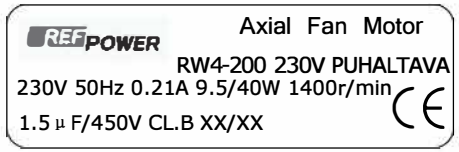

FLOW RATE CURVE :

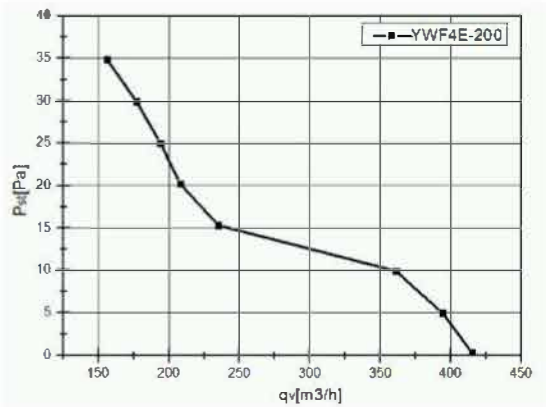

WIRING DIAGRAM :

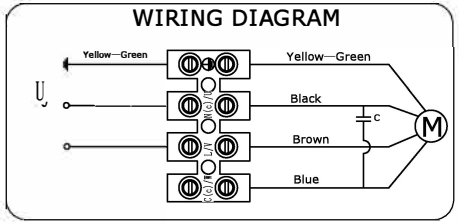

							SIGN	DATE	TITLE
						DRN. BY			RW4-200 230V PUHALTAVA
						CHD. BY			PROJECTION
						ENG. BY			A4
REV.	DESCRIPTION	APPROVED	DATE			APP. BY			SCALE
									SHEET: of