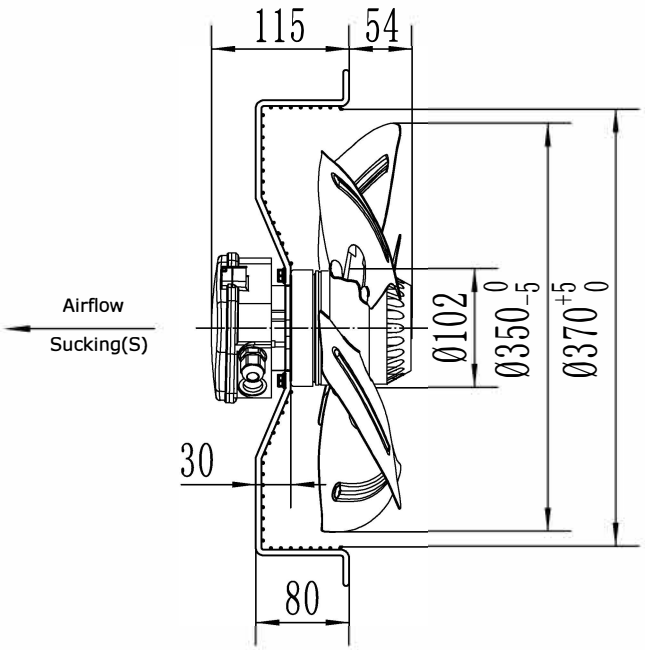

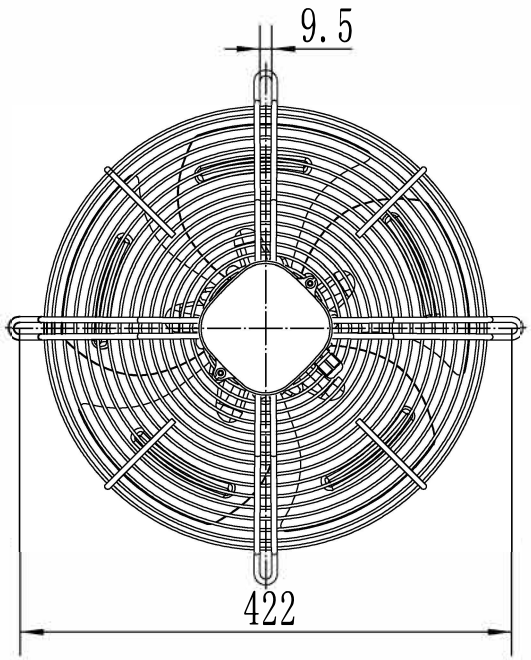

UNIT	Axial fan motor
MOTOR	Three phases motor
MOTOR TYPE	RW4-350 400V IMEVÄ
VOLTAGE (V)	400
FREQUENCY (Hz)	50
INPUT POWER (W)	129
CURRENT (A)	0.40
SPEED (r/min)	1400
AIR FLOW 20Pa (m^3/h)	2305
NOISE (dBA)	64
CAPACITOR (μF/450V)	-
ROTATION	CW ,looking into the end-shield
INSULATION CLASS	B
MOTOR PROTECTION	Thermocontact 135±5℃
TEMPERATURE RISE	75K max
PROTECTION CLASS	IP54
OPERATING TYPE	S1
AMBIENT TEMPERATURE	-30°C +60°C
BEARINGS	Ball bearings
MOUNTING TYPE	Horizontal or Vertical
ELECTRICAL CONNECTION	Lead wire Silikon 4G 0.50mm²+2G 0.30mm², Length 100mm in terminal box connected
APPROVALS	CE
NET WEIGHT/GROSS WEIGHT	5.0/6.0kg
PACKING	38.5*38.5*19cm

LABEL:

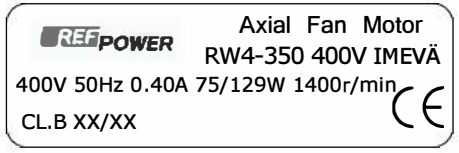

WIRING DIAGRAM:

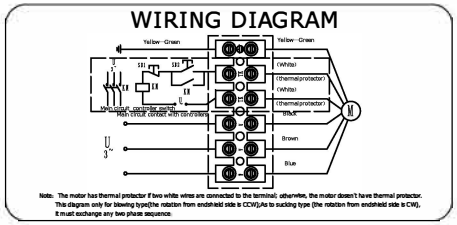

FLOW RATE CURVE:

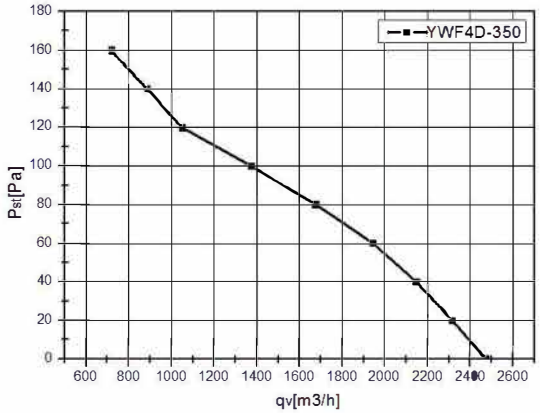

REV.	DESCRIPTION	APPROVED	DATE				SIGN	DATE
						DRN. BY		
						CHD. BY		
						ENG. BY		
						APP. BY		

TITLE
RW4-350 400V IMEVÄ

PROJECTION

A4
SCALE
SHEET: of