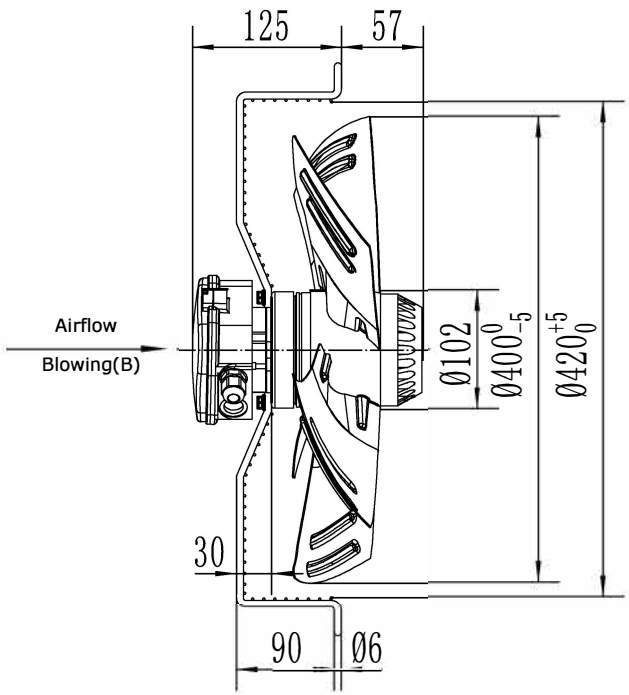

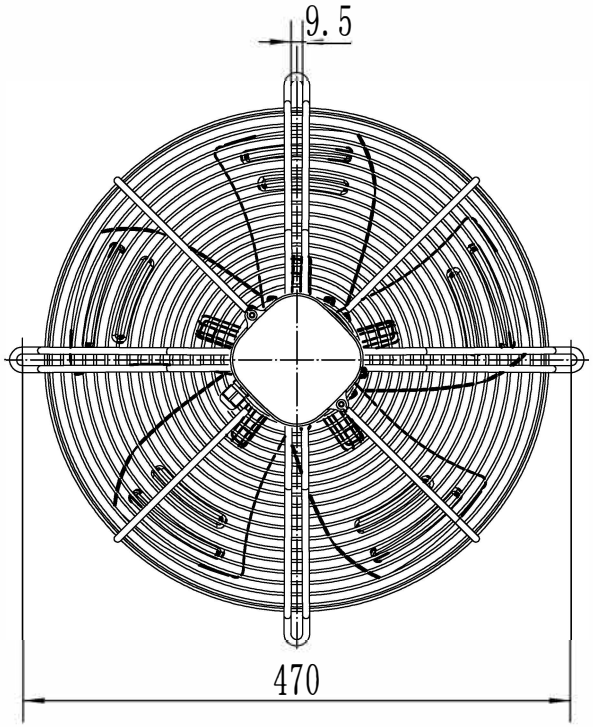

UNIT	Axial fan motor
MOTOR	Single phase motor with capacitor
MOTOR TYPE	RW4-400 230V PUHALTAVA
VOLTAGE (V)	230
FREQUENCY (Hz)	50
INPUT POWER (W)	180
CURRENT (A)	0.82
SPEED (r/min)	1380
AIR FLOW (m^3/h)	3700
NOISE (dBA)	67
CAPACITOR (μF/450V)	6
ROTATION	CCW ,looking into the end-shield
INSULATION CLASS	B
MOTOR PROTECTION	Thermocontact 135±5℃
TEMPERATURE RISE	75K max
PROTECTION CLASS	IP54
OPERATING TYPE	S1
AMBIENT TEMPERATURE	-30°C +60°C
BEARINGS	Ball bearings
MOUNTING TYPE	Horizontal or Vertical
ELECTRICAL CONNECTION	Lead wire Silikon 4G 0.50mm² ,Length 100mm in terminal box connected (40.5mm² 100mm)
APPROVALS	CCC、CE
NET WEIGHT/GROSS WEIGHT	6.0/7.0kg
PACKING	43.5*43.5*20cm

LABEL :

REFPOWER Axial Fan Motor
RW4-400 230V PUHALTAVA
230V 50Hz 0.82A 112/180W 1380r/min
6 μF/450V CL.B XX/XX
CE

WIRING DIAGRAM :

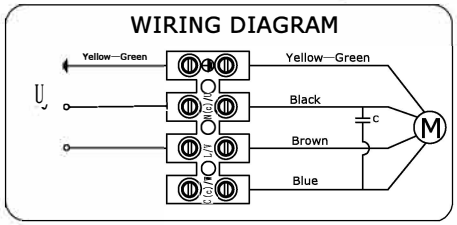

FLOW RATE CURVE :

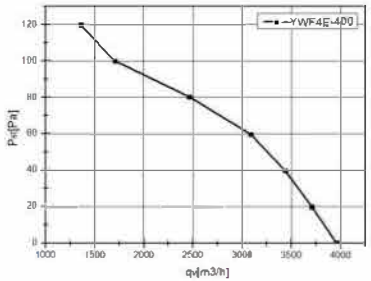

ErP2015 LABEL:

ErP2015 (N40)
N=44.08 η statA= 33.2%
RW4-350 230V PUHALTAVA

REV.	DESCRIPTION	APPROVED	DATE				SIGN	DATE
						DRN. BY		
						CHD. BY		
						ENG. BY		
						APP. BY		

TITLE
RW4-400 230V PUHALTAVA

PROJECTION

A4
SCALE
SHEET: of