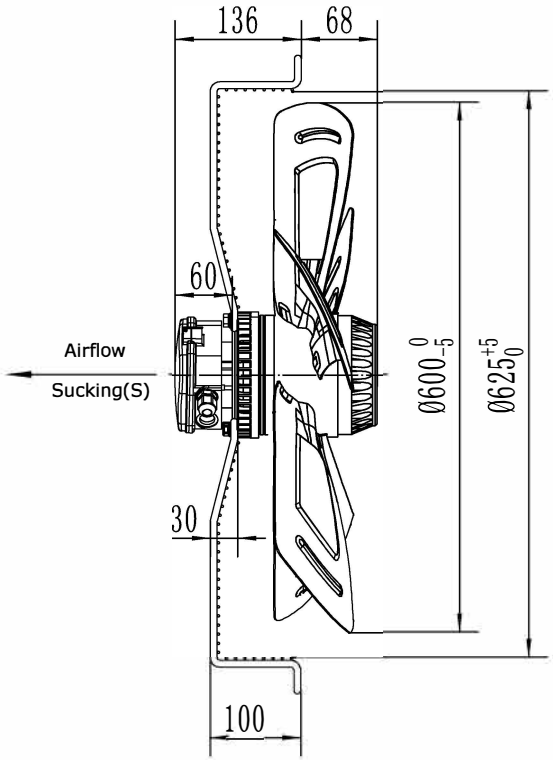

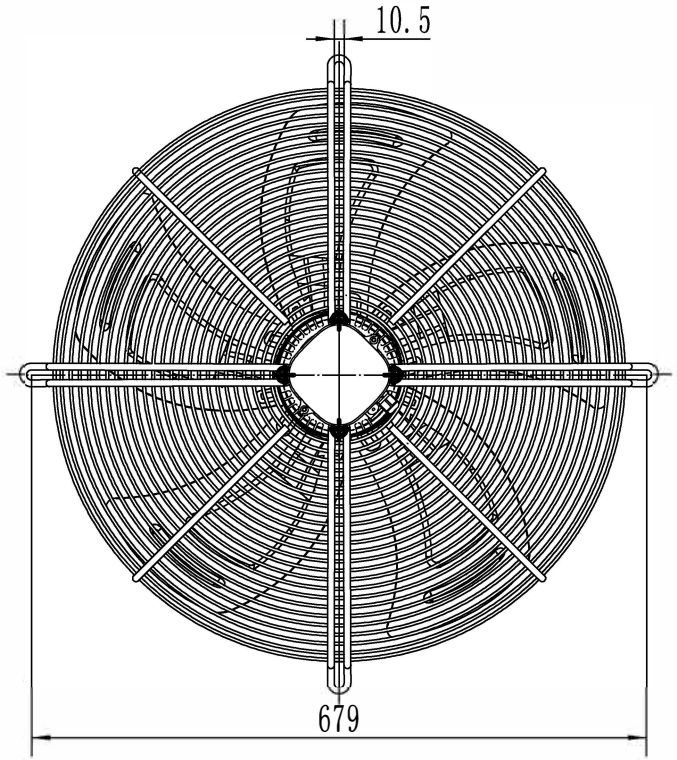

UNIT	Axial fan motor
MOTOR	Three phases motor
MOTOR TYPE	RW4-600 400V IMEVÄ
VOLTAGE (V)	400
FREQUENCY (Hz)	50
INPUT POWER (W)	780
CURRENT (A)	1.57
SPEED (r/min)	1360
AIR FLOW 20Pa (m³/h)	10250
NOISE (dBA)	74
CAPACITOR (μF/450V)	-
ROTATION	CW ,looking into the end-shield
INSULATION CLASS	B
MOTOR PROTECTION	Thermocontact 135±5℃
TEMPERATURE RISE	75K max
PROTECTION CLASS	IP54
OPERATING TYPE	S1
AMBIENT TEMPERATURE	-30°C +60°C
BEARINGS	Ball bearings
MOUNTING TYPE	Horizontal or Vertical
ELECTRICAL CONNECTION	Lead wire Silikon 4G 0.75mm²+2G 0.30mm² ,Length 100mm in terminal box connected
APPROVALS	CE
NET WEIGHT/GROSS WEIGHT	14.0/16.0kg
PACKING	63.5*63.5*23cm

LABEL :

REFPOWER Axial Fan Motor
RW4-600 400V IMEVÄ
400V 50Hz 1.57A 560/780W 1360r/min
CL.B XX/XX
CE

FLOW RATE CURVE:

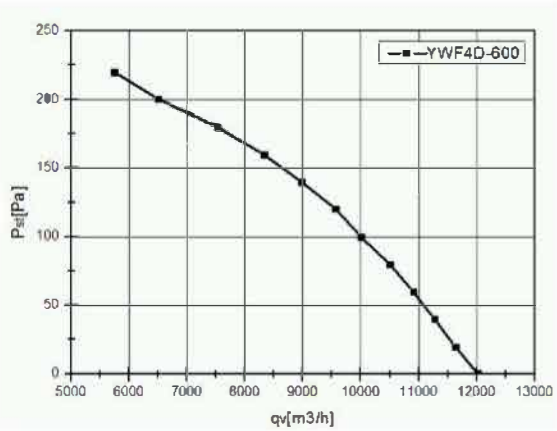

WIRING DIAGRAM:

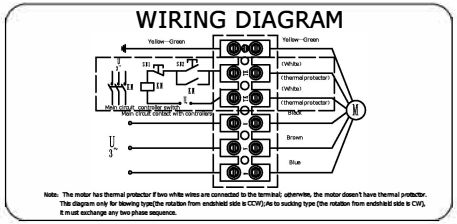

							SIGN	DATE	TITLE RW4-600 400V IMEVÄ
						DRN. BY			
						CHD. BY			PROJECTION A4
						ENG. BY			SCALE
REV.	DESCRIPTION	APPROVED	DATE			APP. BY			SHEET: of