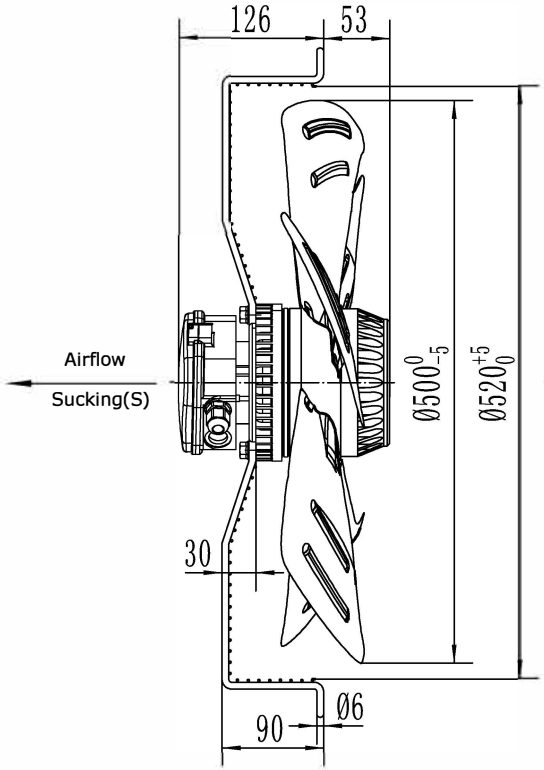

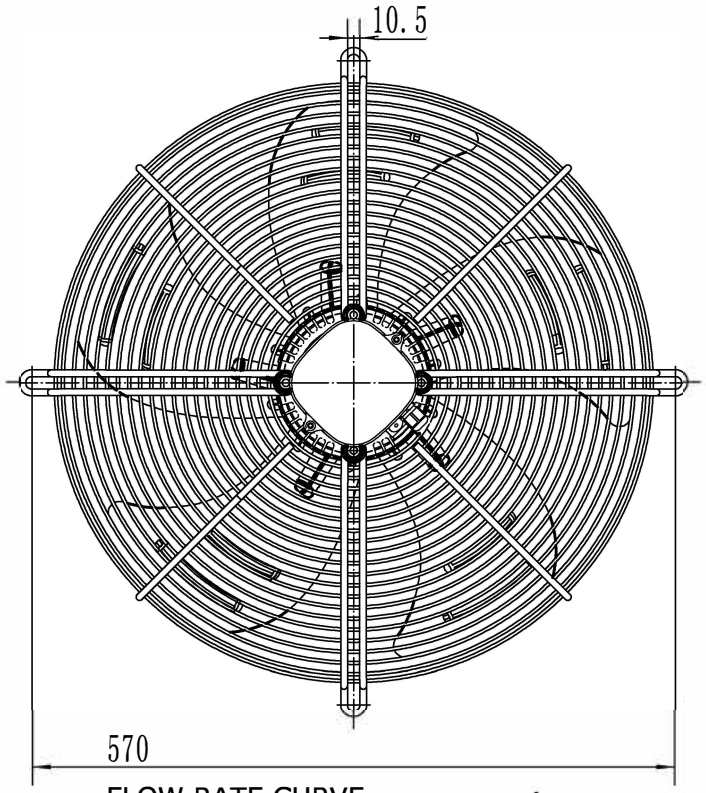

UNIT	Axial fan motor
MOTOR	Three phases motor
MOTOR TYPE	RW6-500 400V IMEVÄ
VOLTAGE (V)	400
FREQUENCY (Hz)	50
INPUT POWER (W)	170
CURRENT (A)	0.46
SPEED (r/min)	920
AIR FLOW 20Pa (m³/h)	5250
NOISE (dBA)	66
CAPACITOR (μF/450V)	-
ROTATION	CW ,looking into the end-shield
INSULATION CLASS	B
MOTOR PROTECTION	Thermocontact 135±5℃
TEMPERATURE RISE	75K max
PROTECTION CLASS	IP54
OPERATING TYPE	S1
AMBIENT TEMPERATURE	-30°C +60°C
BEARINGS	Ball bearings
MOUNTING TYPE	Horizontal or Vertical
ELECTRICAL CONNECTION	Lead wire Silikon 4G 0.75mm²+2G 0.30mm² ,Length 100mm in terminal box connected (40.75mm²+20.30mm 100mm)
APPROVALS	CCC、CE
NET WEIGHT/GROSS WEIGHT	9.0/10.0kg
PACKING	53.5*53.5*22cm

LABEL :

REFPOWER Axial Fan Motor
RW6-500 400V IMEVÄ
400V 50Hz 0.46A 100/170W 920r/min
CL.B XX/XX
CE

FLOW RATE CURVE :

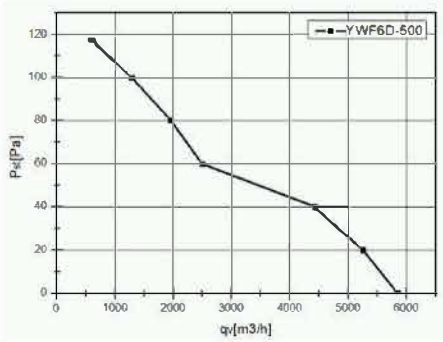

WIRING DIAGRAM :

WIRING DIAGRAM

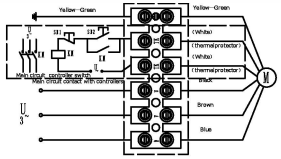

Note: The motor has thermal protector if two white wires are connected to the terminal; otherwise, the motor doesn't have thermal protector.
This diagram only for blowing type(the rotation from endshield side is CCW);As to sucking type (the rotation from endshield side is CW), it must exchange any two phase sequence.

ErP2015 LABEL:

ErP2015 (N40)
N=40.12 η statA= 29.2%
RW6-500 400V IMEVÄ

REV.	DESCRIPTION	APPROVED	DATE				SIGN	DATE
						DRN. BY		
						CHD. BY		
						ENG. BY		
						APP. BY		

TITLE
RW6-500 400V IMEVÄ

PROJECTION

A4
SCALE
SHEET: of