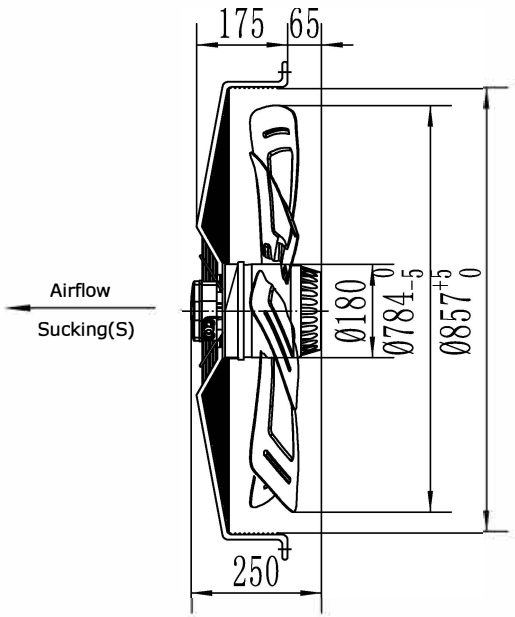

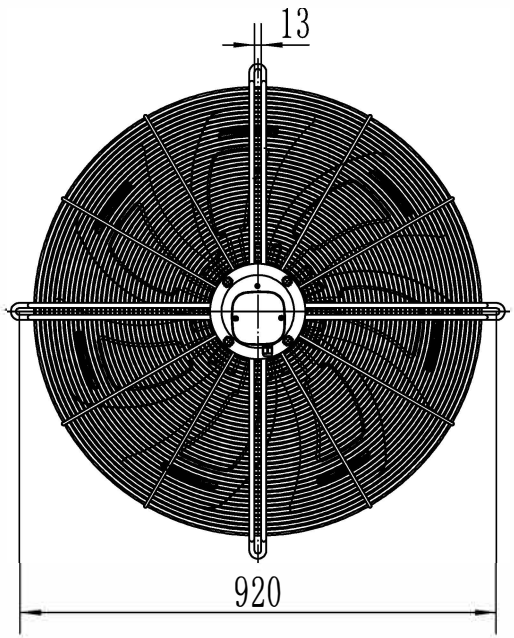

UNIT	Axial fan motor
MOTOR	Three phases motor
MOTOR TYPE	RW6-800 400V IMEVÄ
VOLTAGE (V)	400
FREQUENCY (Hz)	50
INPUT POWER (W)	△/Y 1200/930
CURRENT (A)	△/Y 2.85/1.65
SPEED (r/min)	△/Y 920/770
AIR FLOW 20Pa(m³/h)	△/Y 19860/16590
NOISE (dBA)	△/Y 75/74
ROTATION	CW ,looking into the end-shield
INSULATION CLASS	F
MOTOR PROTECTION	Thermocontact 150±5℃
TEMPERATURE RISE	75K max
PROTECTION CLASS	IP54
OPERATING TYPE	s1
AMBIENT TEMPERATURE	-30°C +60°C
BEARINGS	Ball bearings
MOUNTING TYPE	Horizontal or Vertical
ELECTRICAL CONNECTION	Lead wire Silikon 7G 1.31mm²+ 2G 0.35mm², Length 100mm in terminal box connected (71.31mm²+20.35mm² 100mm)
APPROVALS	CCC、CE
NET WEIGHT/GROSS WEIGHT	35/50kg
PACKING	89*89*27.5cm

LABEL :

REFPOWER Axial Fan Motor
RW6-800 400V IMEVÄ
△ 400V 50Hz 2.85A 968/1200W 920r/min
Y 400V 50Hz 1.65A 730/930W 770r/min
CL.F XX/XX CE

WIRING DIAGRAM :

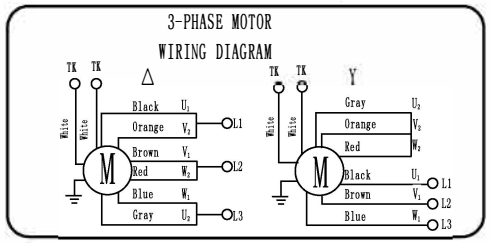

FLOW RATE CURVE :

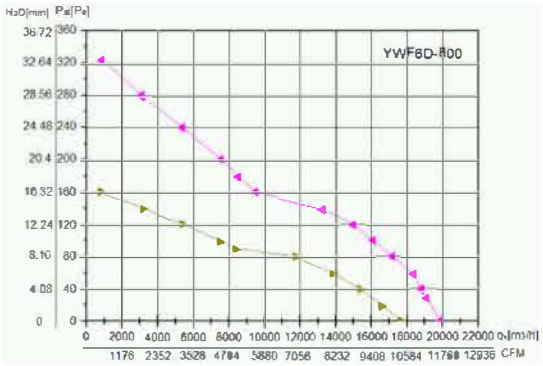

							SIGN	DATE	TITLE
						DRN. BY			RW6-800 400V IMEVÄ
						CHD. BY			PROJECTION A4
						ENG. BY			SCALE
REV.	DESCRIPTION	APPROVED	DATE			APP. BY			SHEET: of