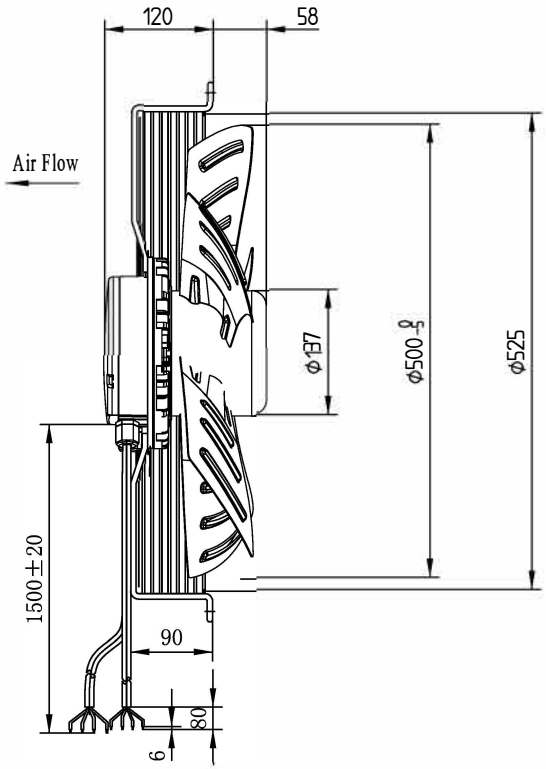

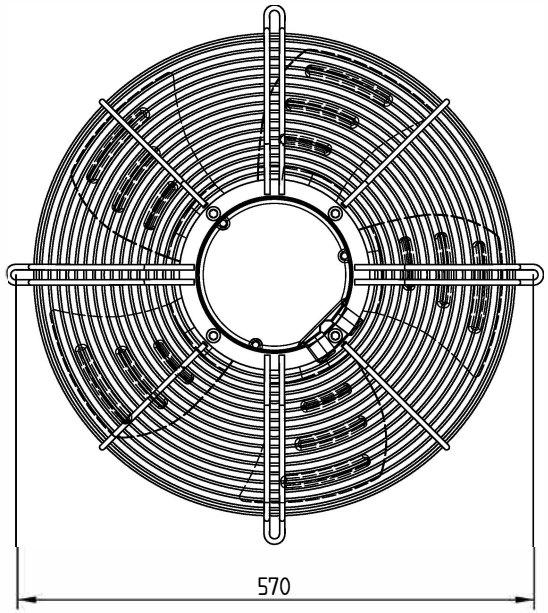

FLOW RATE CURVE :

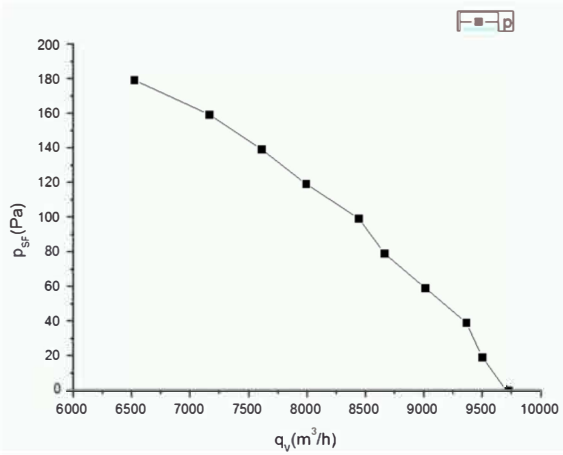

UNIT	EC Axial fan motor
MOTOR	Three phases EC motor
MOTOR TYPE	RWE-500 400V IMEVÄ
VOLTAGE (V)	400
FREQUENCY (Hz)	50/60
INPUT POWER (W)	940
CURRENT (A)	≤1. 8
SPEED (r/min)	1600
AIR FLOW (m³/h)	9700
NOISE (dBA)	74
ROTATION	CCW, seen on rotor of motor
INSULATION CLASS	F
MOTOR PROTECTION	Undervoltage protection Overvoltage protection Overcurrent protection Locked rotor protection Automatic restart capability Soft start
PROTECTION CLASS	IP44
OPERATING TYPE	S1
AMBIENT TEMPERATURE	-25° C +60° C
BEARINGS	Bali bearings
MOUNTING TYPE	Horizontal or Vertical
NET WEIGHT/GROSS WEIGHT	11. 8/13kg
PACKING	55*55*20. 5cm

LABEL :

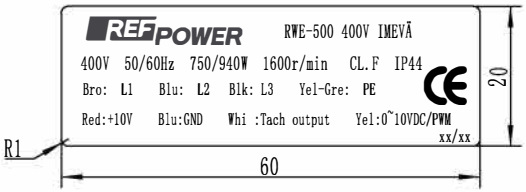

REV.	DESCRIPTION	APPROVED	DATE				SIGN	DATE
						DRN. BY		
						CHD. BY		
						ENG. BY		
						APP. BY		

TITLE

RWE-500 400V IMEVÄ

PROJECTION

A4

SCALE

SHEET: of